KF / KGC Plastic Star Knob

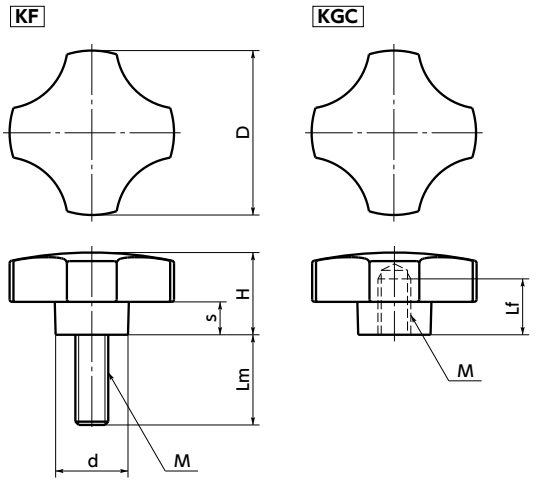

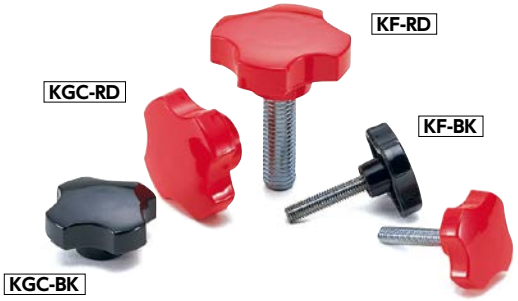

- Male / female screw can be selected by a product code. 1
  - KF ——— Male Screw
  - KGC ——— Female Screw
- There are two color variations. They can be selected by the end symbol of the part number.

End Symbol 3	Knob Color
BK	Black
RD	Red

- Material/Finish

RoHS

	KF	KGC
knob	Nylon 6 (Various Color)	Nylon 6 (Various Color)
Thread Part	SS400 Trivalent Chromate Treatment	Brass

KF Male Screw

Unit : mm

Part Number	D 2	M (Coarse)		Lm	H	s	d	Mass (g)
		Nominal of Thread	Pitch					
KF-25-BK	25	M5	0.8	25	15	6	11	11
KF-25-RD	25	M5	0.8	25	15	6	11	11
KF-33-BK	33	M6	1	30	16.5	7	12	17
KF-33-RD	33	M6	1	30	16.5	7	12	17
KF-40-BK	40	M8	1.25	40	19	7.5	18	37
KF-40-RD	40	M8	1.25	40	19	7.5	18	37
KF-45-BK	45	M10	1.5	40	22	9	22	60
KF-50-BK	50	M12	1.75	40	22	9	23	80

KGC Female Screw

Unit : mm

Part Number	D 2	M (Coarse)		Lf	H	s	d	Mass (g)
		Nominal of Thread	Pitch					
KGC-25-BK	25	M5	0.8	9	15	6	11	10
KGC-25-RD	25	M5	0.8	9	15	6	11	10
KGC-33-BK	33	M6	1	9	16.5	7	12	12
KGC-33-RD	33	M6	1	9	16.5	7	12	12
KGC-40-BK	40	M8	1.25	12	19	7.5	18	18
KGC-40-RD	40	M8	1.25	12	19	7.5	18	18
KGC-45-BK	45	M10	1.5	12	22	9	22	25
KGC-45-RD	45	M10	1.5	12	22	9	22	25
KGC-50-BK	50	M12	1.75	14	22	9	23	40

- Part number specification

KF - 25 - BK
1 2 3

Cleanroom Wash & Packaging ➡ P.xxxx | Screw Combination ➡ P.xxxx | Screw Length Adjustment ➡ P.xxxx | Vibration Resistant ➡ P.xxxx | Laser Marking ➡ P.xxxx

Female screw only/ Add'l charge	Female screw only/ Add'l charge	Male screw only/ Add'l charge	Male screw only/ Add'l charge	Available / Add'l charge